SH26 C036UPW

Counterbalance Monitor Arm

Fits most 17"-27" Flat & Curved Monitors

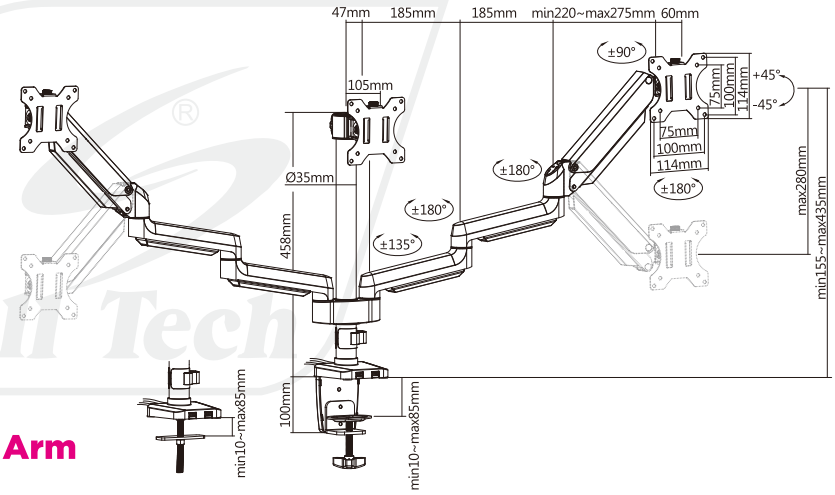

Premium Gas Spring

Aluminum Monitor Arm

Screen Size	VESA Compatible	Weight Capacity	Tilt Range	Swivel Range	Screen Rotation	Detachable VESA Plate	Cable Management	Curved Monitor	Clamp & Grommet Installation
17"-27"	**75x75 100x100**	**1.5-7kg (x3)**	**+45° ~ -45°**	**+90° ~ -90°**	**+180° ~ -180°**				

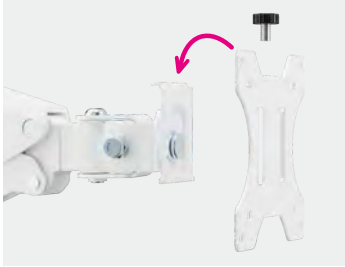

Detachable VESA Panel
makes installations quick easy.

Adjustable Gas Spring Tension
able to bear most types of monitor.

Built-in Cable Management
create a clean look by eliminating cable clutter.

Clamp & Grommet Installation
accommodate more users.